VARIABLE RATIO DIE LUBE MIXER
INSTRUCTION MANUAL

SHAMROCK AUTOMATION, INC.

320 Industrial Park Road
Harrison, Arkansas 72601
Phone: (800)458-5702
Fax: (870)741-9656

TABLE OF CONTENTS

HOOK UP PROCEDURE

No air or electrical connections are required. This mixer uses only the supply water pressure as a power source. Position mixer on edge with lube cylinder (small cylinder) at the bottom. In this position, any air trapped in the lube cylinder is automatically purged during normal operation.

WATER IN: Connect this port to the water supply by means of a shut-off valve and a flexible hose at least three feet long to cushion water pressure surges. A minimum of 25 psi supply water pressure is recommended which produces up to 150 gallons of mixture per hour. At 40 psi up to 200 gph may be mixed. Breakaway friction in seals is high at start-up requiring higher than normal water pressure. To reduce this for a long period shut-down, shut off water supply when water cylinder rod is positioned in mid-stroke (between valve shifts).

WATER OUT: Connect this port to a float valve in the mixture holding tank. When the mixture level lowers, this valve opens creating a pressure drop in the mixer. The mixer automatically starts pumping at a rate proportional to this pressure drop. Use copper tubing or pipe for this connection,

LUBE IN: Although this mixer will siphon, it is recommended that the lube supply barrel be positioned above the mixer to provide a gravity feed. A shut-off valve should be placed in this line. If hose is used, be sure there are no kinks.

LUBE OUT: The lube outlet has been separated from the water outlet for two reasons: (1) it allows the lube pumping system to operate under very low pressure which increases pumping speed and reduces wear on pump components. (2) It simplifies the testing procedure to determine the actual water-to-lube ratio. The lube outlet should be connected by means of a hose to a separate inlet into the mixture holding tank. Position this inlet so the lube pours into the water stream coming from the float valve. This assures complete mixing. Use hose or pipe for this line. If the mixture holding tank is pressurized, lube cylinder back pressure can be reduced by connecting the drain hole to the tank. This reduces the pressure drop across the mixer required for its operation.

TROUBLE SHOOTING THE VARIABLE RATIO DIE LUBE MIXER

MIXER STOPS: Check water supply pressure and float valve action. Remove valve shift rod cover, and pull or push shift rod to start mixer. Observe rod action near end of cylinder rod stroke and determine which of the three following conditions exist.

(1) Shifter bracket moves floating spring retainer against end cap but valve does not shift. Cause: Water pressure is too low to shift valve. See note under WATER IN. Or water cylinder stroke reduced by sediment build-up. Loosen shifter bracket attachment screw, check for cylinder motion when shift rod is moved toward shifter bracket.

(2) Valve shifts before floating spring retainer touches end cap. Cause: Weak valve positioner springs, or excessive friction between floating spring retainers and shift rod. Grease spring retainers, then replace positioner springs.

(3) Floating spring retainer contacts end cap, and valve shifts only part way. Cause: Excessive friction in positioner or floating spring retainer, a broken valve shift spring, or a worn positioner spool. Grease positioner housing with marine water resistant grease, and check shift springs.

WATER - TO - LUBE RATIO CHANGES: Check lube supply and pivot bracket setting. Then perform the following test:

(1) **LUBE INLET RATIO CHANGES:** Remove connection at LUBE IN port and check flow from lube supply barrel. Check for restricted air vent in barrel.

(2) **VALVE SEAL LEAK IN LUBE CIRCUIT:** Cover lube discharge pipe in holding tank with thumb and cycle mixer very slowly. Lube should force its way around thumb when lube cylinder extends. If lube flow can be held back, lube valve seals are leaking.

(3) **LUBE PISTON LEAK:** Lube flowing from lube cylinder rear drain hole indicates a leaky piston seal. (A Lube Piston Seal Kit is available from Shamrock Automation)

NOTE: A lean mixture can be caused by leaking seals in the control valve or a leaking water piston. The following tests will isolate the problem:

(a) **WATER LEAK INTO LUBE SYSTEM:** Shut off lube supply at lube barrel and cycle mixer slowly. Discharge from LUBE OUT should eventually stop. If it continues and becomes thinner, a leaky control valve seal is the cause.

(b) **LEAK ACROSS WATER CYLINDER:** Turn down water supply shut-off valve until shift actuator bracket barely moves. If bracket moves against floating spring retainer but does not shift valve and water trickles out of float valve, leakage is indicated. Replace valve seals and repeat this test. If leakage continues, water piston seal needs replacing. (Water Piston Seal Kit is available from Shamrock Automation)

REPLACEMENT PARTS

All parts including the repair kits listed above may be ordered from the manufacturer using the part numbers listed at the following address:

SHAMROCK AUTOMATION, INC.
320 INDUSTRIAL PARK ROAD
HARRISON, AR 72601
PHONE: (870) 741-3641
FAX: (870) 741-9656

NOTE: The mixer may be returned to the factory for repairs. All worn parts will be replaced and tested.

SERVICING THE VARIABLE RATIO DIE LUBE MIXER

CAUTION: THE WATER SUPPLY VALVE MUST BE TURNED OFF

CHANGING MIXTURE RATIO: The rocker arm connecting the two cylinder rods is marked with different water-to-lube ratios. By loosening the two screws indicated, the pivot bracket may be moved by gentle tapping. When the proper ratio number is aligned with the arrow on the pivot bracket, the two screws should be re-tightened.

VALVE SHIFT SPRING REPLACEMENT: Back out the set screw in the end cap, and unscrew the end cap. Remove the two screws in the shifter bracket and take off this bracket. The end cap, one shift spring and floating spring retainer will come with it, allowing the inner floating spring retainer and spring to be removed. Grease the shift rod and floating spring retainer when reassembling.

VALVE SEAL REPLACEMENT: Refer to attached sheet showing valve cage assembly.

VALVE POSITIONER SPRINGS REPLACEMENT: Remove the 1/2 x 1/2 x 2 spring retainer blocks on each side of the positioner housing, exposing the two positioner springs. (A Valve Spring Repair Kit containing positioner and shift springs is available from Shamrock Automation)

VALVE POSITIONER BEARINGS REPLACEMENT: Two sealed cam follower bearings are used in the two positioner arms. To gain access to these, proceed as outlined under **VALVE SHIFT SPRING and VALVE POSITIONER SPRINGS REPLACEMENT**. The positioner housing can then be removed from the valve spool assembly. Remove the four 1/4-28 Allen nuts, then use a 3/8 diameter pin punch in the positioner spring holes to wedge the two halves of the positioner housing apart. In re-assembly, be sure that the round .010 brass spacers are placed (one) on each side of the positioner arms, and grease with marine water resistant grease every week.

PISTON ROD SEALS REPLACEMENT: All three rod seals are interchangeable.

> **NEW STYLE:** Sealing is by means of a lip seal. The seal assembly may be removed by first removing the two-inch square retainer cap.
>
> **OLD STYLE:** Sealing is by means of an outside surface o-ring, and inside seal, and a bronze bushing. The seal assembly may be removed by first removing the two-inch square retainer cap. The exposed end has a screwdriver groove which can be used for loosening. This end may then be grasped with pliers and rotated back and forth for removal. In assembly, be sure the screwdriver groove on the OD <u>faces outward.</u> (A Piston Rod Seal Kit including all parts listed above is available from Shamrock Automation)

PIVOT BEARINGS REPLACEMENT: All pivot bearings are sealed ball bearings. <u>Be sure</u> to replace a 1/4" flat washer (1/16" thick) on each side of every bearing to prevent binding.

DIE LUBE MIXER REPAIR KIT

		Mfg. Part#	Mfg. Part Name
MANIFOLD SEAL KIT		30100002	
Qty.	Ref. #		
7	DL68B	30100720	O-RING
9	DL67	30100700	O-RING
2	DL68A	30100710	CUP SEAL
2	EC001F	33090140	O-RING
SPRING KIT		30100004	
Qty.	Ref.#		
2	DL16A	30100300	SHIFT SPRINGS
2	DL25	30100220	POSITIONER SPRINGS
WATER CYLINDER SEAL KIT		30100008	
Qty.	Ref.#		
1	DL60	30100640	O-RING
2	DL92	30100780	O-RING
2	DL64	30100670	PISTON ROD WIPER
2	DL62	30100660	SEAL, ULTRATHANE
2	XO11	33090240	O-RING
LUBE CYLINDER SEAL KIT		30100009	
Qty.	Ref.#		
1	DL58	30100620	O-RING
2	DL91	30100770	O-RING
1	DL64	30100670	PISTON ROD WIPER
1	DL62	30100660	SEAL, ULTRATHANE
1	XO11	33090240	O-RING

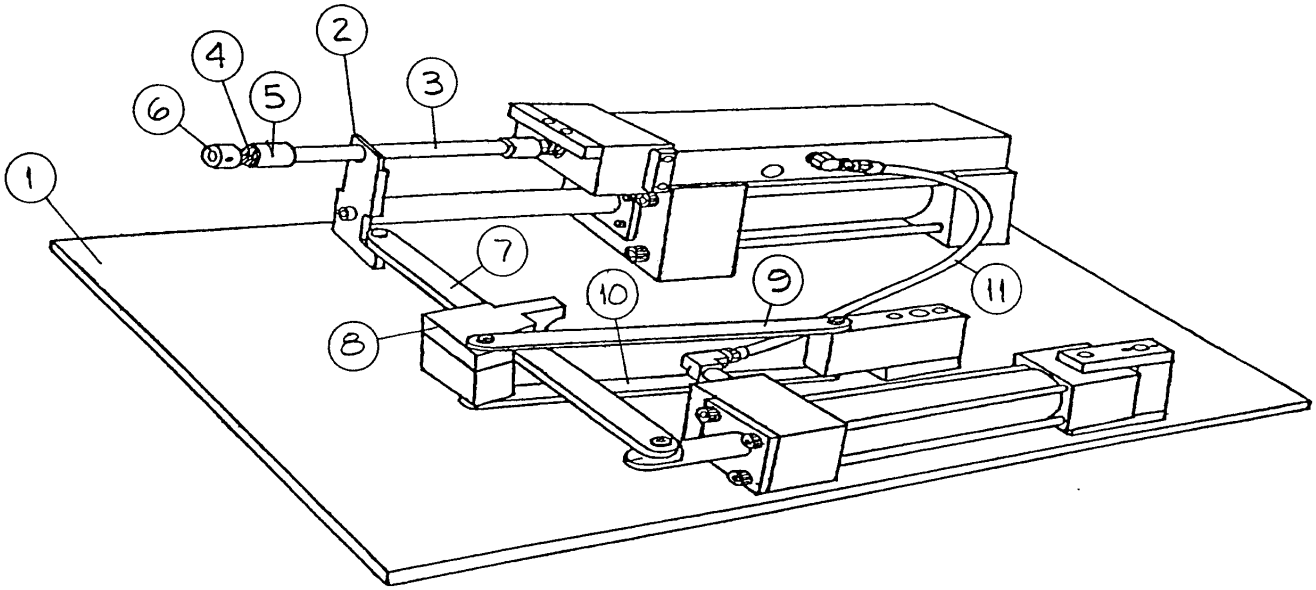

	MFG PART NO	QUANTITY	MFG PART NAME
1	30100025	1 EACH	BASE PLATE
2	30100260	1 EACH	SHIFT ACTUATING BRACKET
3	30100380	1 EACH	SHIFT ROD SPACER 16:1
3	30100390	1 EACH	SHIFT ROD SPACER 2:1 AND 3:1
4	30100300	2 EACH	SHIFT SPRING
5	30100310	2 EACH	SHIFT SPRING RETAINER 16:1
5	30100320	2 EACH	SHIFT SPRING RETAINER 2:1 AND 3:1
6	30100330	1 EACH	SHIFT ROD END CAP
7	30100340	1 EACH	ROCKER ARM
8	30100365	1 EACH	PIVOT BRACKET ASSEMBLY
9	30100400	1 EACH	OUTER ARM PIVOT
10	30100410	1 EACH	INNER ARM PIVOT
11	30100455	1 EACH	HOSE ASSEMBLY

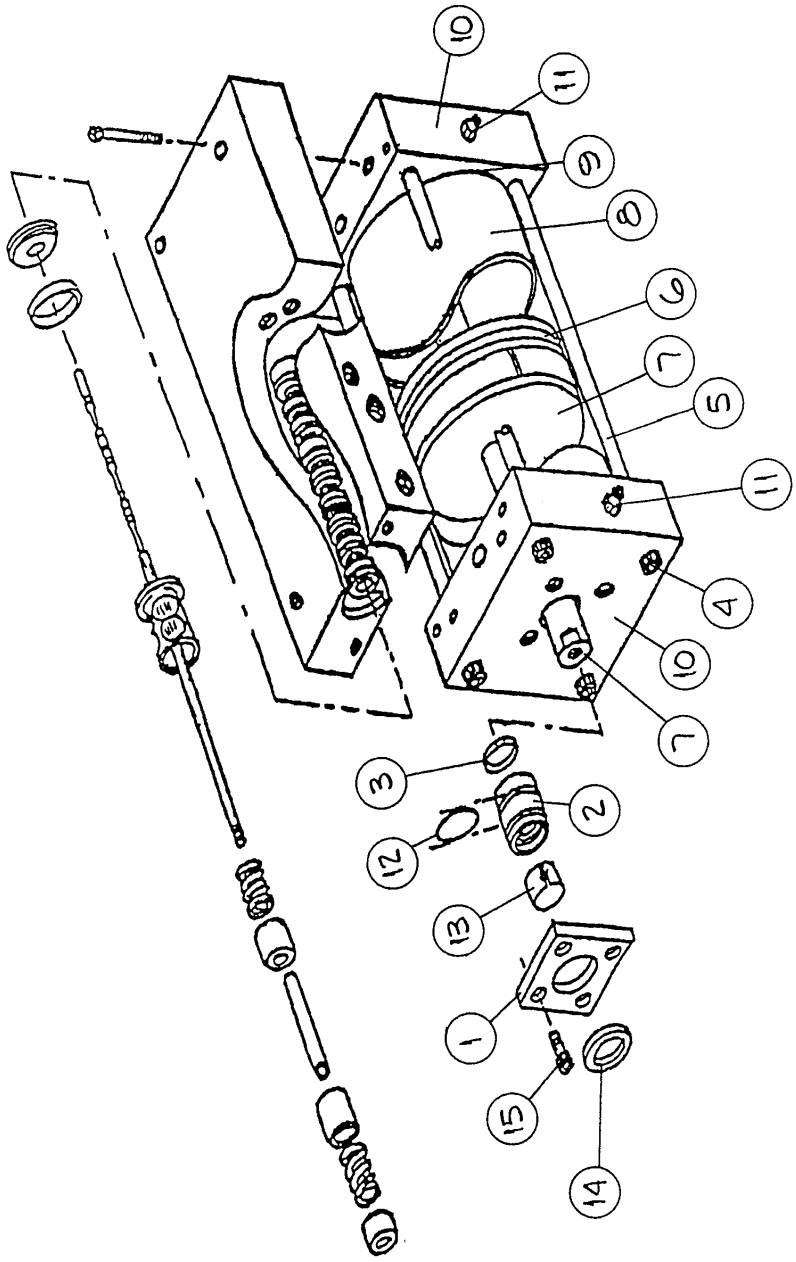

Items 2, 12, and 13 are for Old Style Only

ASSEMBLY DRAWING
VALVE ASSEMBLY
WATER CYLINDER

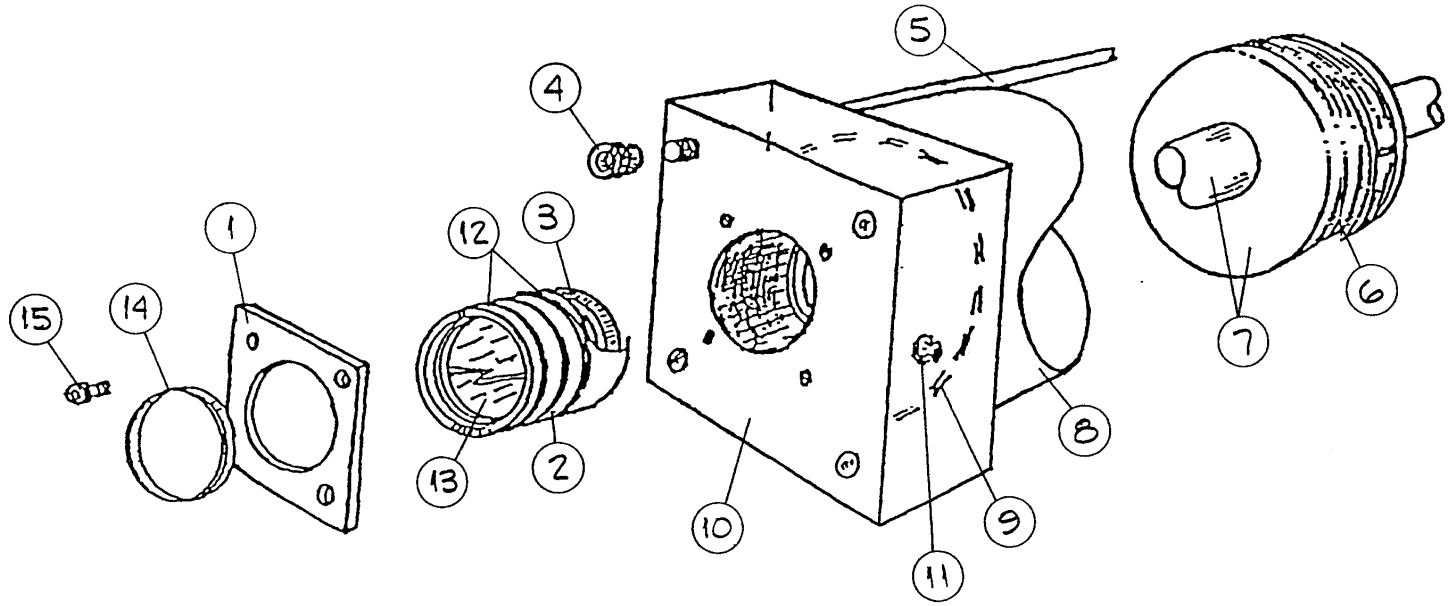

	MFG PART NO	QUANTITY	MFG PART NAME
1	30100090	2 EACH	ROD SEAL CAGE RETAINER
2	30100070	1 EACH	ROD SEAL CAGE OUTER
2	30100080	1 EACH	ROD SEAL CAGE INNER
3	30100660	2 EACH	SEAL ULTRATHANE
4	30100060	8 EACH	1/4"-28 ALLEN NUT
5	30100050	4 EACH	WATER CYLINDER TIE ROD
6	30100640	1 EACH	PISTON SEAL
7	30100018	1 EACH	WATER PISTON ASSEMBLY
8	30100030	1 EACH	WATER CYLINDER BARREL
9	30100780	2 EACH	SEAL-CYLINDER
10	30100029	2 EACH	WATER CYLINDER END CAP
11	32894230	4 EACH	1/4"-28 GREASE FITTING
12	33090240	1 EACH	O-RING
13	30100650	2 EACH	PISTON ROD BUSHING (BRONZE)
13	30100652	2 EACH	PISTON ROD BUSHING (GARLOCK)
14	30100670	2 EACH	PISTON ROD WIPER
15	34801320	8 EACH	RETAINER SCREW

Items 2, 12, and 13 are for Old Style Only

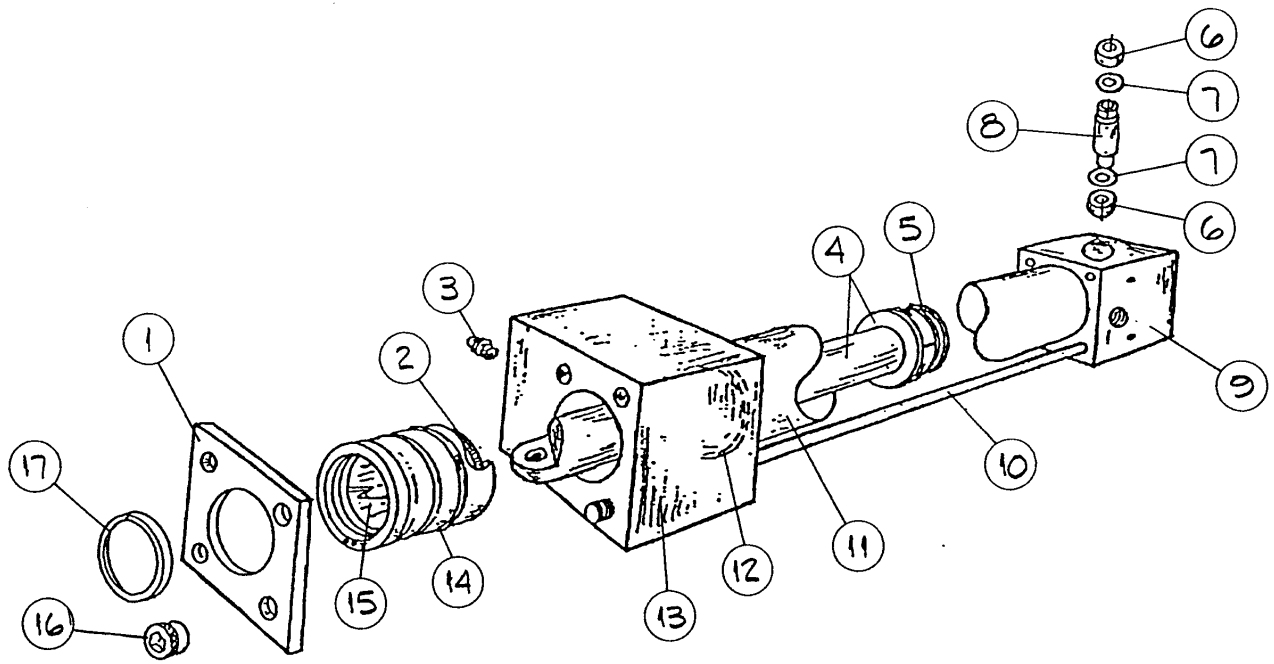

	MFG PART NO	QUANTITY	MFG PART NAME
1	30100090	1 EACH	ROD SEAL CAGE RETAINER
2	30100660	1 EACH	SEAL, ULTRATHANE
3	32894230	1 EACH	1/4"-28 GREASE FITTING
4	30100020	1 EACH	LUBE PISTON ASSEMBLY
5	30100620	1 EACH	O-RING SEAL
6	30100370	2 EACH	PIVOT BEARING
7	30100730	2 EACH	FLAT WASHER
8	30100440	1 EACH	DOUBLE BEARING SPACER
9	30100520	1 EACH	LUBE CYLINDER REAR END CAP 16:1
9	30100530	1 EACH	LUBE CYLINDER REAR END CAP 3:1
10	30100500	4 EACH	LUBE CYLINDER TIE ROD
11	30100510	1 EACH	LUBE CYLINDER BARREL
12	30100770	2 EACH	O-RING SEAL
13	30100490	1 EACH	LUBE CYLINDER FRONT END CAP
14	33090240	1 EACH	O-RING
15	30100650	1 EACH	PISTON ROD BUSHING (BRONZE)
15	30100652	1 EACH	PISTON ROD BUSHING (GARLOCK)
16	34801270	4 EACH	10-32 ALLEN NUT
17	30100670	1 EACH	PISTON ROD WIPER

Items 14 and 15 are for Old Style Only

VALVE CAGE ASSEMBLY FOR THE VARIABLE RATIO DIE LUBE MIXER

NOTE: Use only Shamrock Part No. 30100720 O-Rings on Valve Spool (7 required). These are available from Shamrock Automation. In an emergency, standard 01-010 O-Rings may be substituted.

TO REMOVE VALVE SPOOL ASSEMBLY FROM VALVE HOUSING: Refer to attached mixer drawing.

(1) Remove valve shift rod cover.

(2) Unbolt shifter bracket from water cylinder rod and rocker arm. Notice spacer washer under rocker arm bearing.

(3) Remove 2 valve positioner housing attachment bolts and carefully pull valve spool assembly from valve manifold. **Caution: Valve spool can easily be damaged by bending.**

(4)* Insert a slightly undersized 3/8 diameter rod (such as a 3/8 ejector pin) into the valve cages, until it bottoms out against the inner valve cage rod seal. This prevents the valve cages from moving sideways during removal.

(5)* Insert a 1/2" diameter rod from the opposite end of the valve manifold and gently tap out the spool assembly. This assembly is shown below.

*Do not perform these two steps unless replacing valve spool o-rings does not stop leakage.

NOTE: When re-installing valve cages, use the same 3/8 guide rod. **Use only Teflon grease on outer O-rings.**

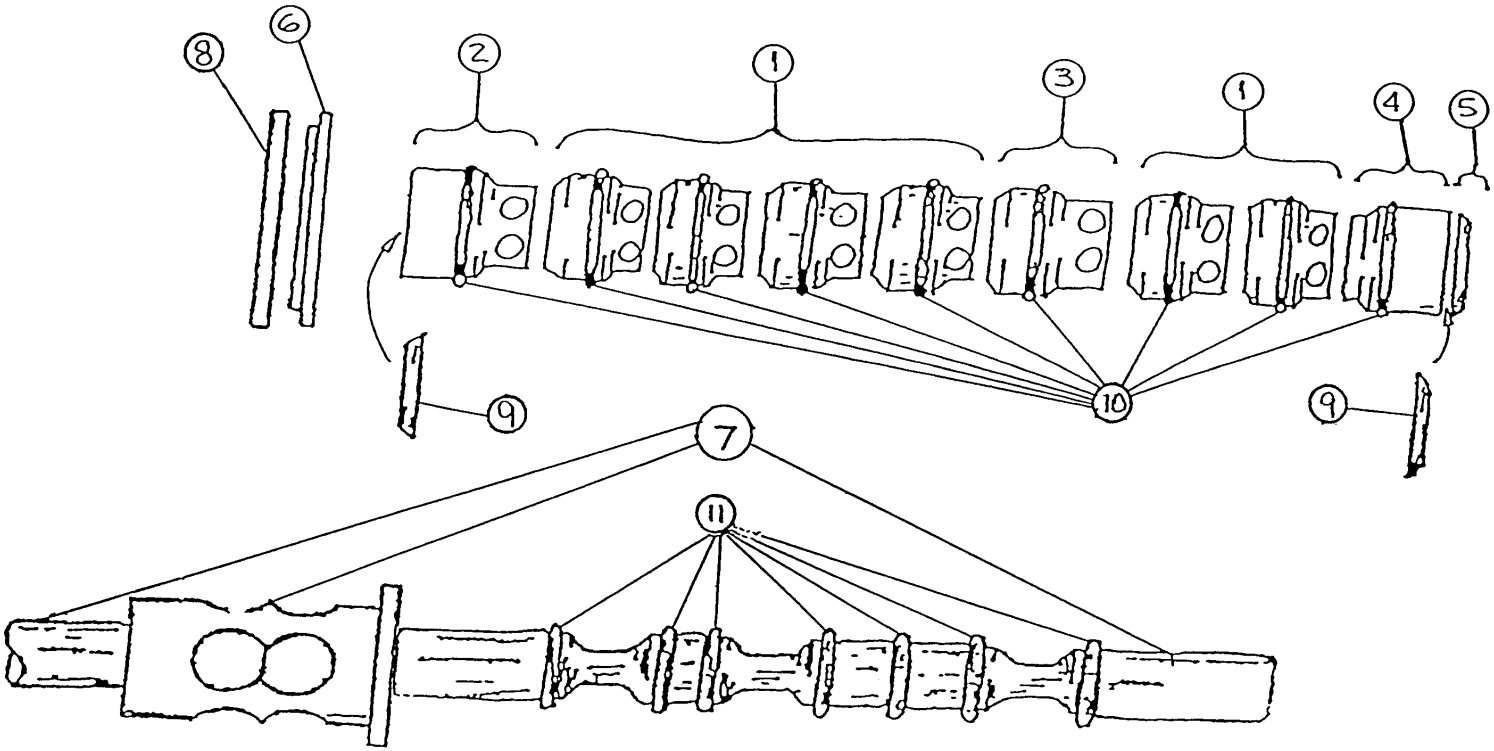

	MFG PART NO	QUANTITY	MFG PART NAME
1	30100140	6 EACH	SMALL VALVE CAGE
2	30100150	1 EACH	OUTER VALVE CAGE
3	30100160	1 EACH	LARGE VALVE CAGE
4	30100170	1 EACH	INNER VALVE CAGE
5	30100180	1 EACH	INNER VALVE CAGE END CAP
6	30100190	1 EACH	VALVE CAGE END CAP
7	30100012	1 EACH	VALVE SPOOL ASSEMBLY
8	30100600	1 EACH	ALIGNMENT RING
9	30100710	2 EACH	SEAL
10	30100700	9 EACH	O-RING
11	30100720	7 EACH	GO-RING

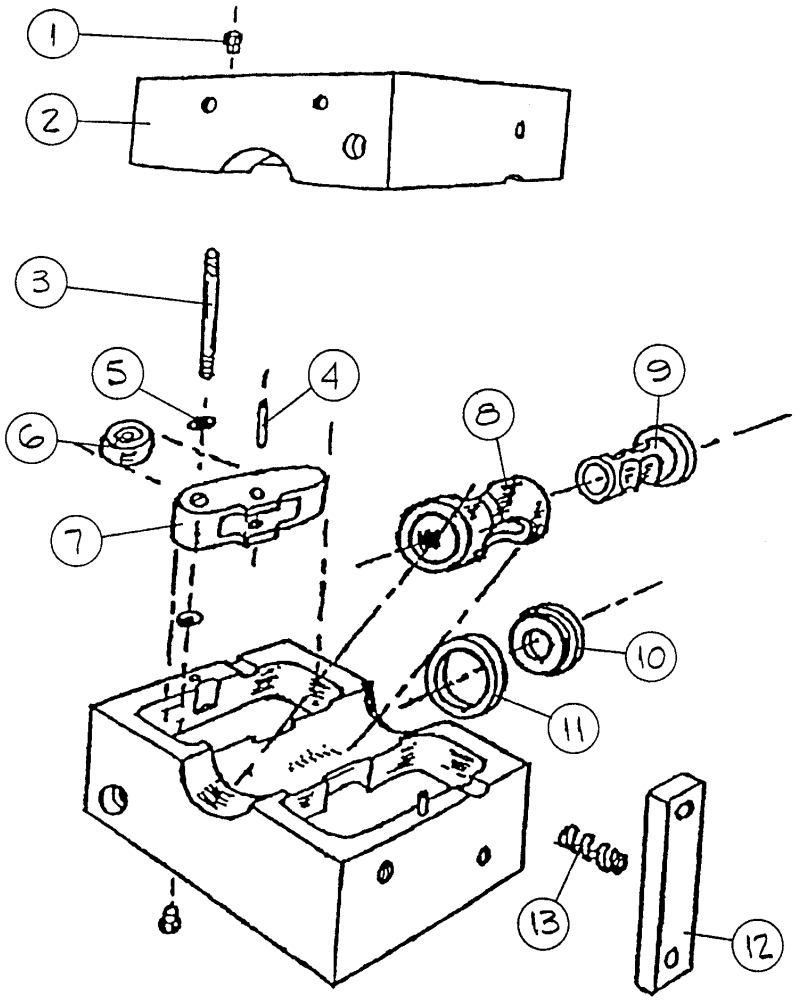

	MFG PART NO	QUANTITY	MFG PART NAME
1	30100060	4 EACH	ALLEN NUTS 1/4"-28NF
2	30100200	1 EACH	POSITIONER HOUSING (2 PIECE
3	30100570	2 EACH	POSITIONER ARM PIVOT SHAFT
4	34210817	2 EACH	1/4" dia. X 1" ROLL PIN
5	30100230	4 EACH	.01 THICK WASHER
6	30100240	2 EACH	CAM ROLLER BEARING
7	30100210	2 EACH	POSITIONER ARM
8	30100590	1 EACH	POSITIONER BUSHING
9	30100012	1 EACH	VALVE SPOOL ASSEMBLY
10	30100190	1 EACH	VALVE CAGE END CAP
11	30100600	1 EACH	ALIGNMENT RING
12	30100580	2 EACH	POSITIONER SPRING RETAINER
13	30100220	2 EACH	POSITIONER SPRING

WARRANTY

Seller fully warrants that equipment, service, repair or parts supplied shall conform to the description in the quotation and agrees to repair or replace F.O.B. shipping point, any parts (excepting expendable items such as ladle cups, ladle attachment brackets, ladle attachment arms, hydraulic seals, fuses, etc), services, or repairs that fail due to defects in material or workmanship within (1) one year of start-up of equipment or eighteen (18) months after shipment, whichever occurs first, or in the case of service, repairs, or part within one (1) year of supplying such service, repair, or part. If the equipment, service, repair, part includes software, Seller warrants, for a period of one (1) year of start-up or eighteen (18) months after shipment, whichever occurs first, that the software supplied or serviced will meet its published functional specifications. Should software fail to meet the specifications, or be otherwise defective, Seller shall promptly correct errors or non-conformities. If correction is not possible, Seller shall replace defective software, or, at Seller's option, refund the purchase price paid for such software. Other than those expressly state herein, THERE ARE NO OTHER WARRANTIES OF ANY KIND, EXPRESSED OR IMPLIED, AND SPECIFICALLY EXCLUDED, BUT NOT BY WAY OF LIMITATION, ARE THE IMPLIED WARRANTIES OF FITNESS FOR PARTICULAR PURPOSE AND MERCHANTABILITY.

IT IS UNDERSTOOD AND AGREED THAT SELLER'S LIABILITY, WHETHER IN CONTRACT, IN TORT, UNDER ANY WARRANTY, IN NEGLIGENCE OR OTHERWISE SHALL NOT EXCEED AND BUYER'S REMEDY IS LIMITED TO EITHER (I) REPAIR OR REPLACEMENT OF THE DEFECTIVE PARTS F.O.B. SHIPPING POINTS OR CORRECTION OF DEFECTIVE SERVICE OR REPAIR, OR AT SELLER'S OPTION (II) RETURN OF THE PRODUCT AND REFUND OF THE PURCHASE OF SERVICE PRICE. UNDER NO CIRCUMSTANCES SHALL SELLER BE LIABLE FOR SPECIAL, INDIRECT, INCIDENTAL, OR CONSEQUENTIAL DAMAGES, THE PRICE STATED FOR THE EQUIPMENT, SERVICE, REPAIR OR PARTS IS A CONSIDERATION IN LIMITING SELLER'S LIABILITY. NO ACTION, REGARDLESS OF FORM, ARISING OUT OF THE TRANSACTIONS OF THIS AGREEMENT MAY BE BROUGHT BY PURCHASER MORE THAN ONE YEAR AFTER THE CAUSE OF ACTION HAS ACCRUED. THE WARRANTY FOR THE EQUIPMENT, SERVICE, REPAIR, OR PARTS PROPOSED IN THIS QUOTATION AS STATED IN THE ABOVE PARAGRAPHS. IT IS NOT RE-STATED-NOR DOES IT APPEAR IN ANY OTHER FORM.